DHB122000(12V200AH)

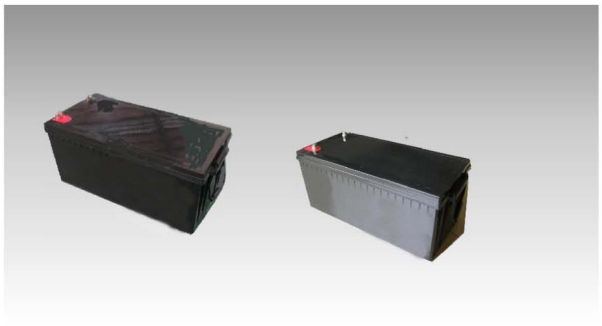

Outer dimensions (mm)

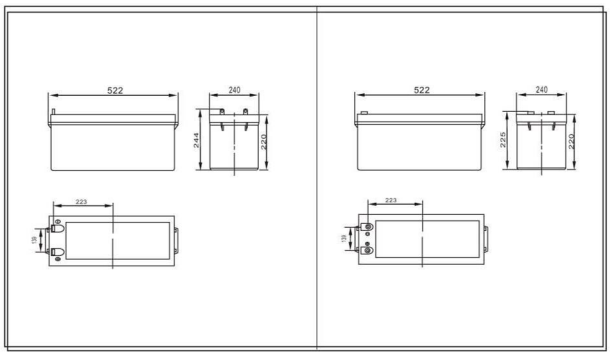

Specifications

Nominal Voltage		12V
Rated capacity (10 hour rate)		200 Ah
Dimensions	Total Height	244 mm (9.60 inches)
	Height	220 mm (8.66 inches)
	Length	522 mm (20.6 inches)
	Width	240 mm (9.45 inches)
Weight Approx		58.7 Kg

Terminal Type (mm)

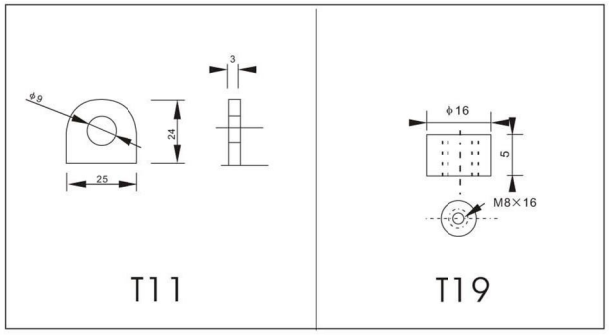

Characteristics

Capacity 25℃(77℉)	20 hour rate(10 A) 5 hour rate(32A) 1 hour rate(120 A)	200 AH 160 AH 120 AH
Internal Resistance	Full charged Battery at 25℃(77℉)	approx 2.8mΩ
Capacity affected by Temperature (10hour rate)	40℃(104℉) 25℃(77℉) 0℃(32℉) -15℃(5℉)	102% 100% 85% 65%
Self-Discharge at 25℃(77℉)	Capacity after 3 month storage Capacity after 6 month storage Capacity after 12 month storage	91% 82% 64%
Terminal	T11 T19	
Charge (constant Voltage) Cycle	Initial Charging Current less than 80 A Voltage 14.10-15.00V	
Charge (constant Voltage) Float	Voltage 13.50-13.80V	

Discharge Curves 25℃(77℉)

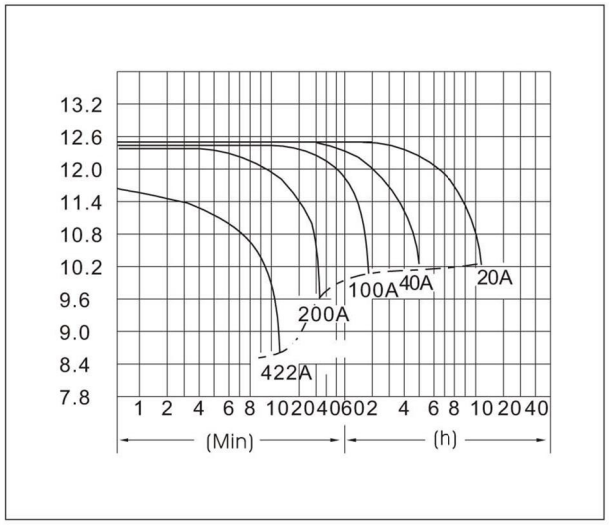

Constant Current(Amp) and Constant Power(Watt) Discharge Table at 25℃(77℉)

Time		5min	10min	15min	30min	1h	2h	3h	4h	5h	8h	10h	20h
9.60V	A	641	422	340	228	120	70	51	40.0	33.0	23.4	21.0	11.3
	W	6611	4507	3648	2451	1296	769	572	450.0	375.2	268.2	242.6	131.9
10.20V	A	620	381	320	218	113	67	50	39.0	32.4	22.8	20.6	11.0
	W	6626	4252	3585	2447	1276	770	579	453.5	377.7	266.8	242.0	129.0
10.50V	A	600	341	280	204	109	65	49	38.4	32.0	22.6	20.2	11.0
	W	6554	3875	3198	2348	1265	756	569	449.3	375.2	265.8	239.0	130.0
10.80V	A	578	321	260	188	106	64	48	37.8	31.2	22.0	20.0	10.8
	W	6490	3702	3000	2178	1229	745	561	446.3	368.8	260.7	237.7	128.6
11.10V	A	559	301	240	168	102	62	46	36.8	30.4	21.4	19.0	10.2
	W	6339	3483	2798	1966	1200	733	546	438.3	362.8	256.3	229.4	123.6